hydrology®
WATER RE | DISCOVERED

Product Specification

Modern 45 Degree Full Wall Mount Vanity

Model: 834292

Collection: Blu Bathworks

Origin: Italy

Description: Wall Mount Vanity w/ Natural Oak Frame & Vintage Oak Front 27-1/2”W x 19”H x 20”D w/ Integrated Countertop Basin in White Matte

GENERAL FEATURES & SPECIFICATIONS

- Wall Mount Vanity
- Includes: Deep Drawer, Slim Drawer Insert, Protective Mats, Dividers, 2-Storage Compartments, 3-Storage Bins & Tissue Box
- 27-1/2”W x 19”H x 20”D
- Slim Inner Drawer Designed for Plumbing Clearance
- Two Lower Angles Feature a Unique 45 Degree Join
- Solid Rust Free Painted Powder Frame Construction & Drawer Runners
- Recessed Integral Finger Pull Channel with Hettich Soft Close System
- Material: Idroleb Ecological Panel
- Finish: Natural Oak Frame & Vintage Oak Front
- Integrated Basin & Countertop with Integral Slot Overflow
- Matching Waste Cover
- Knockouts May be Drilled on-site for Deck Mount Faucets
- Non-Porous, Stain Resistant
- 27-3/4”W x 6-3/4”H x 20-1/4”D (705 x 173 x 515mm)
- Apron Height: ½” (15mm)
- Drain Hole: 1-3/4” (45mm)
- Material: Blu Stone
- Finish: Matte White

Codes/Standards:

ADA, ASME A112.19.2, IAPMO/cUPC, ICC/ ANSI A117.1, CSA B 45, Fixture Dimensions and Hydraulic Performance meet or exceed ANSI/ASME standard A112.19.2. A112.19.9M, and CAN/CSA B45 requirements

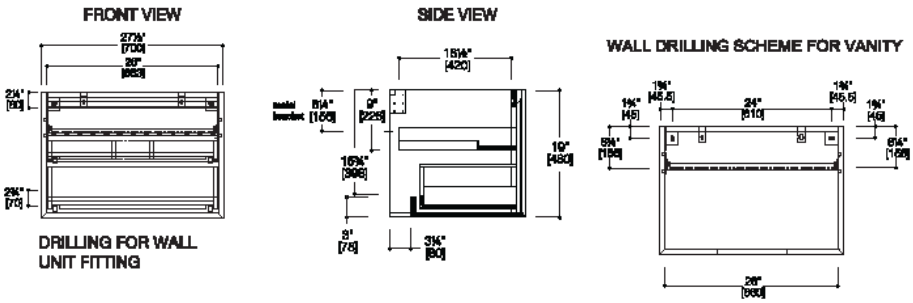

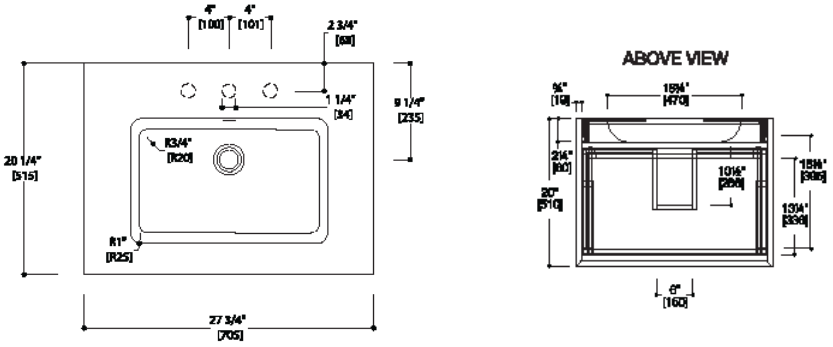

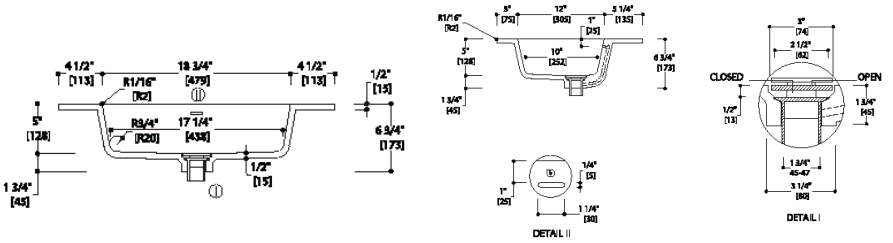

We cannot guarantee the accuracy of this information. Dimensions are nominal – for guidance only and are not to be used for pre-installation.

For further information call 312.832.9000 or visit us at hydrologychicago.com