hydrology®
WATER RE | DISCOVERED

Product Specification

Modern Alesia Plus Deck Mount Faucet

Style Number: 729123

Collection: Franz Viegener

Origin: Germany

Description: Alesia Plus Deck Mount 8cc Widespread Lavatory Faucet w/ Cross Handles and Pop-up 6-7/8" Spout Reach in Polished Chrome

GENERAL FEATURES & SPECIFICATIONS
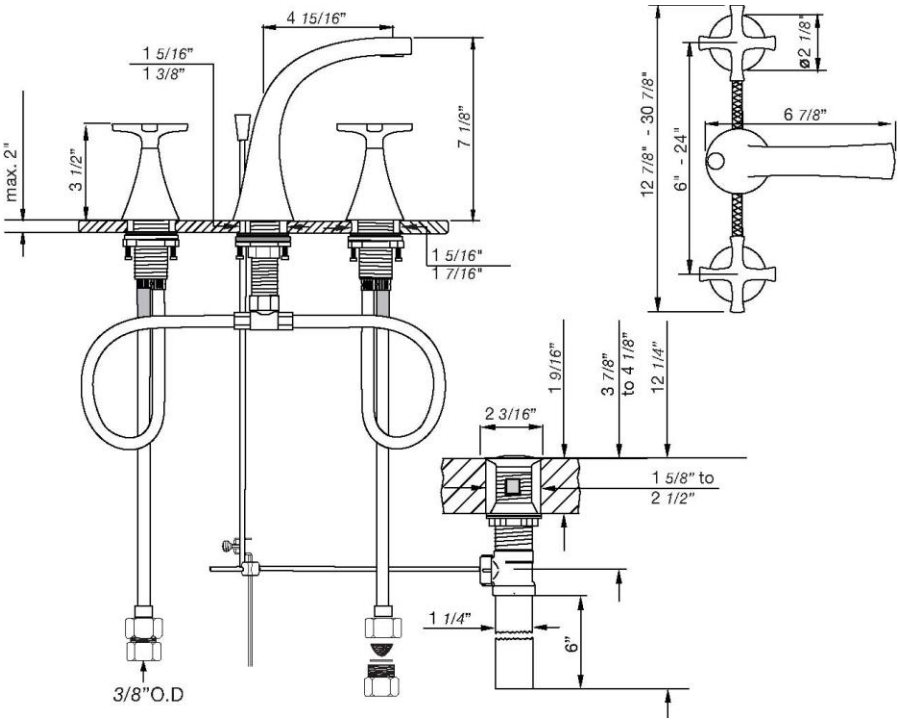
- Deck Mounted
- 8cc Widespread
- Cross Handles
- Brass Valve Bodies
- Quarter Turn Ceramic Cartridges
- Flexible S.S. Connectors With Sediment Screens
- Pop-up Drain With Lift Rod And Tailpiece
- Stationary Spout With Recessed Aerator
- For 8in Or 16in Centers
- 6-7/8in Spout Reach
- **Material: No Lead Brass**
- **Finish: Polished Chrome, Brushed Nickel, Polished Nickel, Polished Gold, Rose Gold, Brushed Gold, Satin Black PVD, or Unlacquered Polished Brass**