hydrology®
WATER RE | DISCOVERED

Product Specification

Modern Beyond Crystal Deck Mount Faucet

Style Number: 774524

Collection: THG

Origin: France

Description: Beyond Crystal Deck Mount Faucet Widespread w/ 2- Red Crystal LED Low Voltage Lighted Handles, Drain, & 6-3/4" Spout Projection No Flange in Chrome

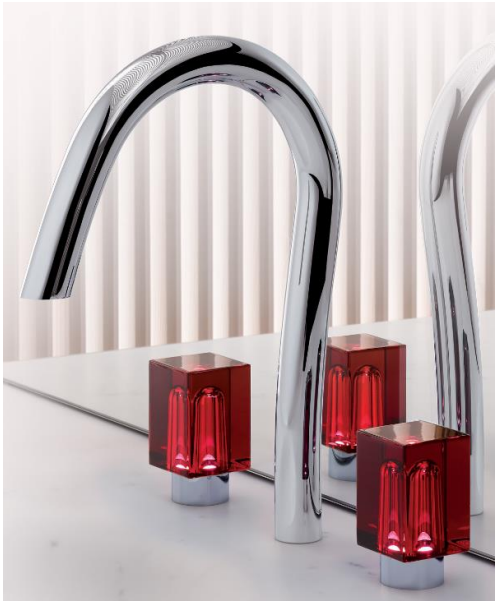

GENERAL FEATURES & SPECIFICATIONS

- Deck Mounted
- Widespread
- With or Without Flange
- LED Lighted Low Voltage Handles
- Drain Included
- 6-3/4" Projection
- 2.2GPM
- **Material: Brass & Crystal**
- **Finishes: Polished Chrome, Stainless Steel, Polished Nickel, Matte Nickel, Matte Chrome, Satin Chrome, Light Coated Bronze, Black Nickel, Polished Gold, Satin Gold, Matte Gold, Silver Rhodium, Rose Gold, Soft Gold, Soft Matte Gold, Soft Satin Gold, Brown Bronze PVD, Matte Brown Bronze PVD, Polished Antique Silver, Matte Antique Copper, Antique Nickel, Brass PVD, Matte Brass PVD, Gold PVD, Matte Gold PVD, Nickel PVD, Matte Nickel PVD, Blush PVD, Matte Blush PVD, Graphite PVD, Matte Graphite PVD, Umber PVD, Matte Umber PVD**
- **Colors: Aqua, Blue, Champagne, or Red**

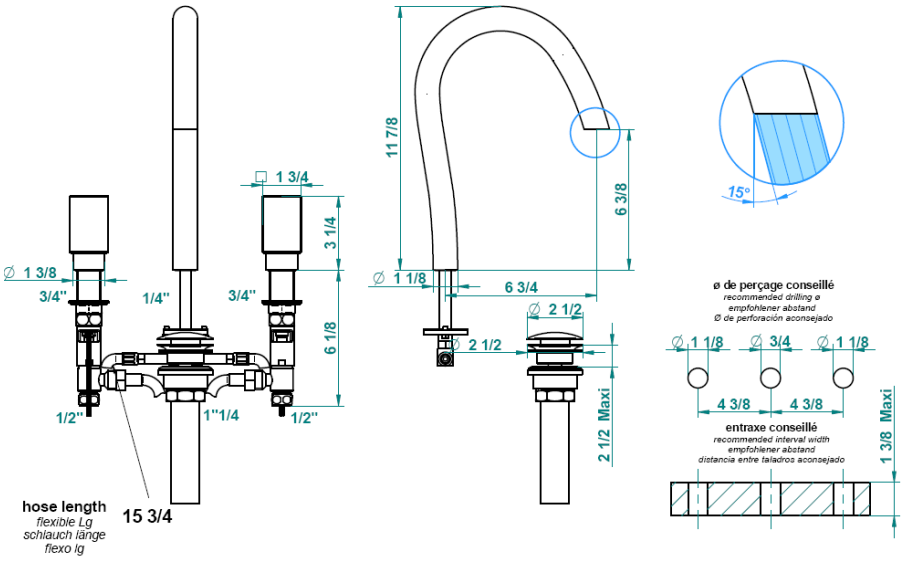

CODES & STANDARDS

NSF 61s9, ASME A112.18.1-2005/CSA B125.1-05 & CA law AB 1953

We cannot guarantee the accuracy of this information. Dimensions are nominal – for guidance only and are not to be used for pre-installation.

For further information call 312.832.9000 or visit us at hydrologychicago.com