hydrology®
WATER RE | DISCOVERED

Product Specification

Modern Milano Wall Mount Shower Head

Style Number: 771308

Collection: Fantini

Origin: Italy

Description: Milano Wall Mount Shower Head Offset to the Left 19-3/8" Projection w/ Anti-Lime Scale System & Rough Valve in Chrome

GENERAL FEATURES & SPECIFICATIONS

- Wall Mounted
- Offset Showerhead to the Left
- 19-3/8" Projection
- Anti-lime Scale System
- Fixing System to Ensure Firm Installation
- Water Flow Restricted to 2.5gpm
- 2gpm Spare Flow Restrictor Included
- Rough Valve Included
- **Material: Brass or Stainless Steel**
- **Finishes: Chrome, Matte Gun Metal PVD, or Brushed Stainless Steel**

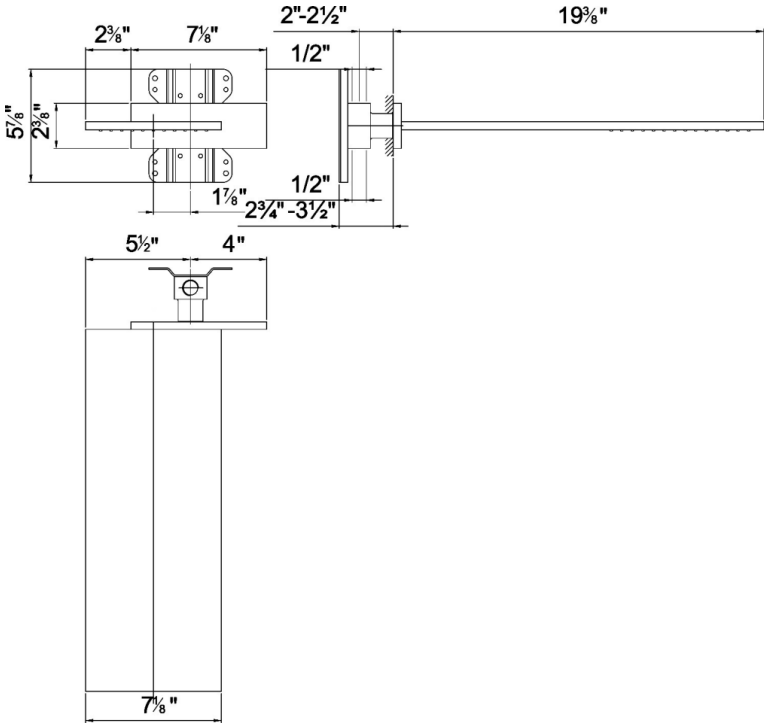

CODES & STANDARDS

Code Approved for US & Canada and Cal Green Compatible