hydrology®
WATER RE | DISCOVERED

Product Specification

# Modern Pisa Freestanding Oval Bathtub

## Model: 814851

## Collection: Blu Bathworks

## Origin: Italy

## Description: Pisa Acrylic Freestanding Oval Tub in White 62-1/4” x 29-1/4” x 22-1/2”

### GENERAL FEATURES & SPECIFICATIONS

- Freestanding Acrylic Bathtub
- Streamlined, high profile one piece design
- 62-1/4” x 29-1/4” x 22-1/2”
- Includes integral slot overflow
- Includes white matte or gloss waste
- Tailpiece not included
- 66 gallon capacity
- 64 degree interior slope
- 2-1/4” to Overflow
- Standard Finishes: Matte or Gloss White
- Material: Acrylic

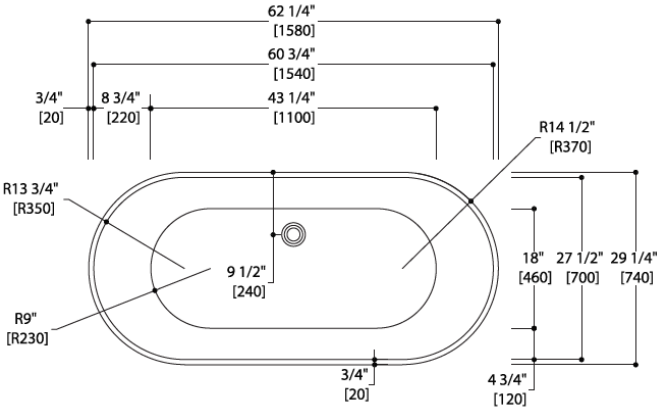


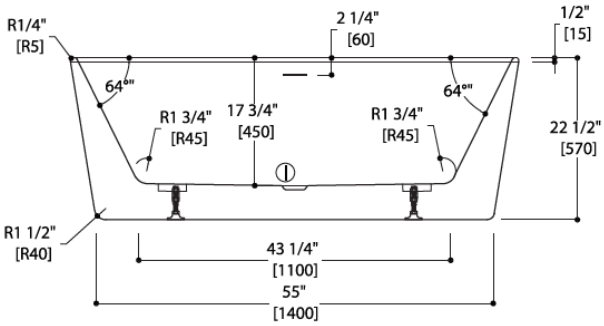


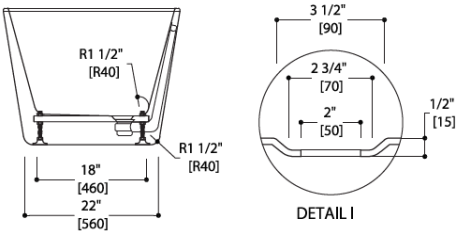


**Codes/Standards:**

Meets or exceeds ANSI / ASME standard Z124.1.2 and CAN / CSA B 45 requirements
IAPMO / UPC / cUPC

We cannot guarantee the accuracy of this information. Dimensions are nominal – for guidance only and are not to be used for pre-installation.

For further information call 312.832.9000 or visit us at hydrologychicago.com