hydrology®
WATER RE | DISCOVERED

Product Specification

Modern Vola Deck Mount Faucet

Style Number: 571579

Collection: Vola

Origin: Denmark

Description: Vola Deck Mount Two Hole Faucet Set w/ 8-1/4" High Double Swivel Spout, 1" Lever Handle, 8" Spout Projection, w/ Drain in Stainless Steel

GENERAL FEATURES & SPECIFICATIONS
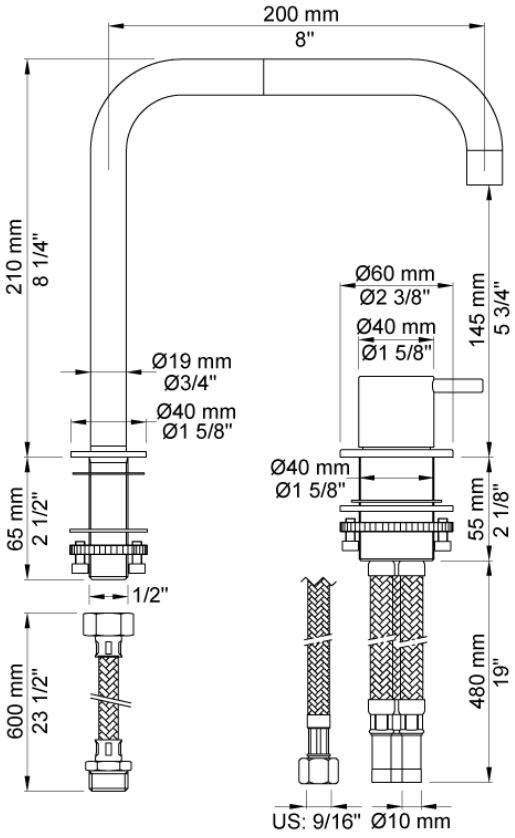
- Deck Mounted
- Two Holes
- 8" Spout Projection
- 8-1/4" High Double Swivel Spout
- 1", 2" or 4" Lever Operating Handle
- No Drain
- 2.2GPM
- **Material: Solid Brass or Stainless Steel**
- **Finishes: : Chrome, Brushed Chrome, Brushed Stainless Steel, Black Chrome PVD, Brushed Black Chrome PVD, Deep Brilliant Black PVD, Copper PVD, Brushed Copper PVD, Gold PVD, Brushed Gold PVD, Polished Nickel PVD, or Natural Unfinished Brass**
- **Colors: Grey, Light Blue, Orange, Light Green, Yellow, Dark Grey, Mocha, Bright Red, Dark Blue, Gloss Black, White, Carmine Red, Pink, Matte White, or Matte Black**