hydrology®
WATER RE | DISCOVERED

Product Specification

Modern Vola Deck Mount Faucet

Style Number: 772954

Collection: Vola

Origin: Denmark

Description: Vola Deck Mount Faucet Set w/ Two Holes for Vessels or Kitchens 10-1/2" High Swivel Spout, 1" Lever Handle, & 9" Projection No Drain in Polished Chrome

GENERAL FEATURES & SPECIFICATIONS

- Deck Mounted
- For Vessel Bains or Kitchen
- 2- Holes
- 10-1/2" Swivel Spout
- 9" Projection
- 1", 2", or 4" Operating Lever Handle
- 2.2gpm
- **Material: Solid Brass or Stainless Steel**
- **Finishes: : Chrome, Brushed Chrome, Brushed Stainless Steel, Black Chrome PVD, Brushed Black Chrome PVD, Deep Brilliant Black PVD, Copper PVD, Brushed Copper PVD, Gold PVD, Brushed Gold PVD, Polished Nickel PVD, or Natural Unfinished Brass**
- **Colors: Grey, Light Blue, Orange, Light Green, Yellow, Dark Grey, Mocha, Bright Red, Dark Blue, Gloss Black, White, Carmine Red, Pink, Matte White, or Matte Black**

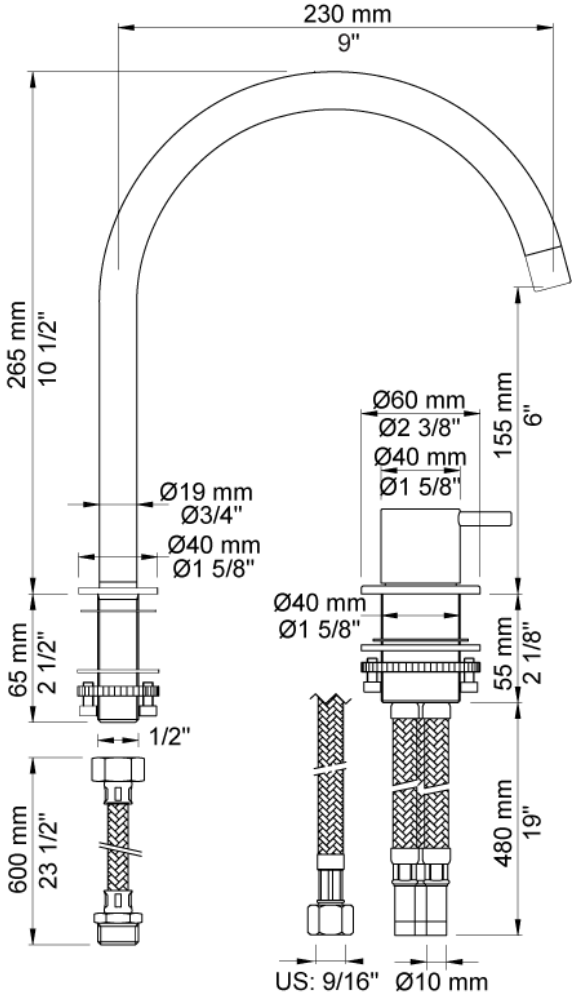

We cannot guarantee the accuracy of this information. Dimensions are nominal – for guidance only and are not to be used for pre-installation.

For further information call 312.832.9000 or visit us at hydrologychicago.com